S90ED02 (SE/S3-02)

H

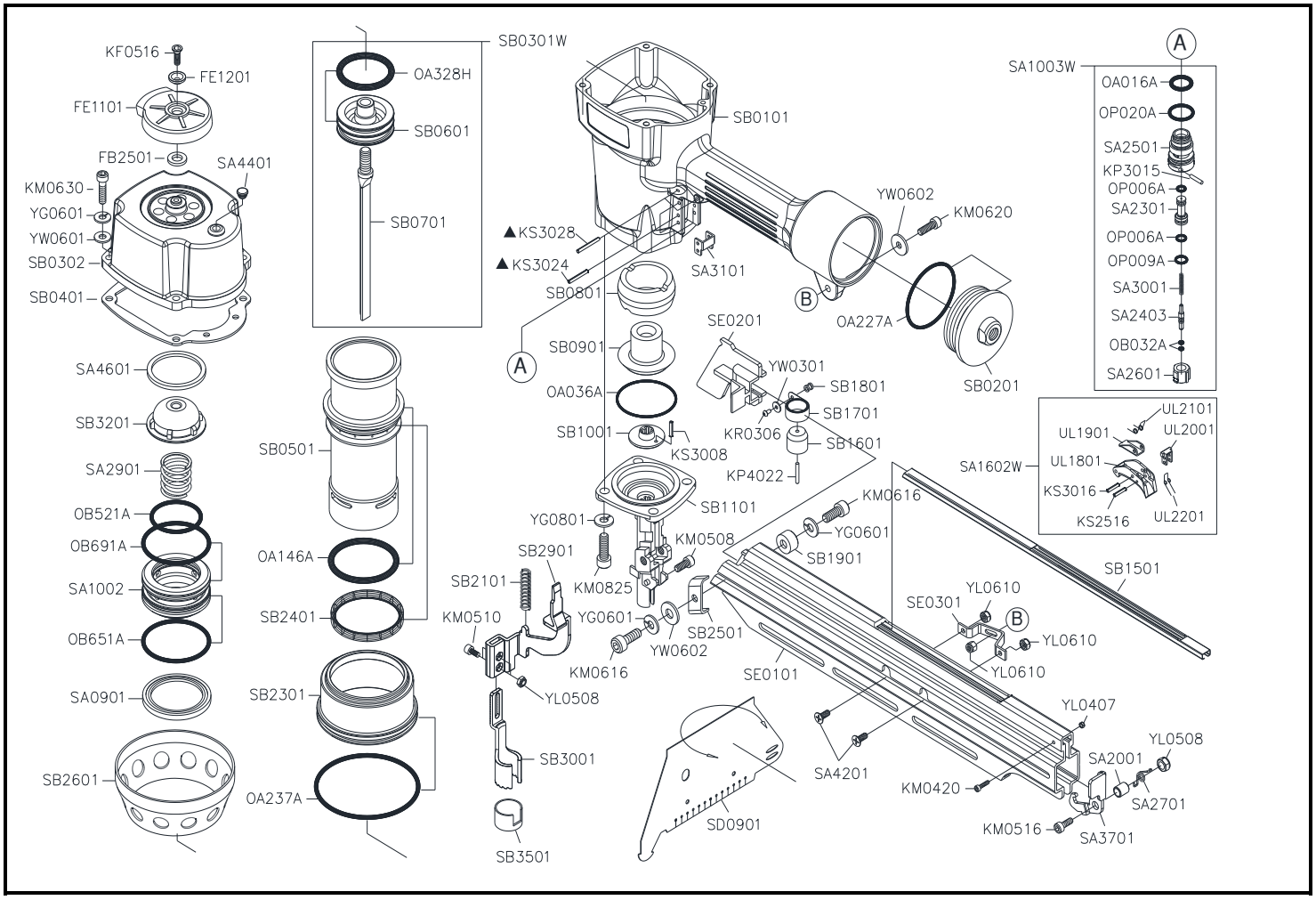

Part_No	Description	Spec	Q'ty	Part_No	Description	Spec	Q'ty	Part_No	Description	Spec	Q'ty
FB2501	PISTON STOP		1	SA1002	HEAD VALVE PISTON		1	SB2301	CYLINDER RING		1
FE1101	EXHAUST CAP		1	SA1003W	RESTRICTIVE TRIGGER ASSY.		1	SB2401	CHECK SEAL		1
FE1201	EXHAUST CAP RING		1	SA1602W	TRIGGER ASSY.		1	SB2501	SUPPORT		1
KF0516	FLAT HD.BOLT	M5×0.8－16L	1	SA2001	LATCH BUSHING		1	SB2601	COLLAR		1
KM0420	HEX.SOC.HD.BOLT	M4×0.7－20L	1	SA2301	PILOT VALVE		1	SB2901	SAFETY		1
KM0508	HEX.SOC.HD.BOLT	M5×0.8－8L	2	SA2403	TRIGGER VALVE STEM		1	SB3001	WORK CONTACTING ELEMENT		1
KM0510	HEX.SOC.HD.BOLT	M5×0.8－10L	2	SA2501	TRIGGER VALVE SEAT		1	SB3201	PISTON STOP		1
KM0516	HEX.SOC.HD.BOLT	M5×0.8－16L	1	SA2601	TRIGGER VALVE SEAT		1	SB3501	SAFETY CUSHION		1
KM0616	HEX.SOC.HD.BOLT	M6×1.0－16L	2	SA2701	SPRING		1	SD0901	DUST SHIELD		1
KM0620	HEX.SOC.HD.BOLT	M6×1.0－20L	1	SA2901	COMPRESSION SPRING		1	SE0101	MAGAZINE SEAT		1
KM0630	HEX.SOC.HD.BOLT	M6×1.0－30L	4	SA3001	COMPRESSION SPRING		1	SE0201	PUSHER		1
KM0825	HEX.SOC.HD.BOLT	M8×1.25－25L	4	SA3101	SAFETY GUIDE		1	SE0301	SUPPORT		1
KP3015	PARALLEL PIN	ϕ3×15L	2	SA3701	LATCH		1	UL1801	TRIGGER		1
KP4022	PARALLEL PIN	ϕ4×22L	1	SA4201	SCREW		2	UL1901	CONTACT LEVER		1
KR0306	BUTTON HD.BOLT	M3×0.5－6L	1	SA4401	GROMMET		1	UL2001	STOP PLATE		1
KS2516	SPRING PIN	ϕ2.5-16L	1	SA4601	SPACER		1	UL2101	SPRING		1
KS3008	SPRING PIN	ϕ3-8L	1	SB0101	BODY		1	UL2201	SPRING		1
KS3016	SPRING PIN	ϕ3-16L	1	SB0201	END CAP		1	YG0601	SPRING WASHER	ϕ6	6
▲ KS3024	SPRING PIN	ϕ3-24L	3	SB0301W	DRIVER ASSY.		1	YG0801	SPRING WASHER	ϕ8	4
▲ KS3028	SPRING PIN	ϕ3-28L	2	SB0302	CYLINDER CAP		1	YL0407	LOCK NUT	M4×0.7	1
OA016A	O-RING	ARP568-016	1	SB0401	CAP SEAL		1	YL0508	LOCK NUT	M5×0.8	3
OA036A	O-RING	ARP568-036	1	SB0501	CYLINDER		1	YL0610	LOCK NUT	M6×1.0	3
OA146A	O-RING	ARP568-146	1	SB0601	MAIN PISTON		1	YW0301	FLAT WASHER	ϕ3	1
OA227A	O-RING	ARP568-227	1	SB0701	DRIVER		1	YW0601	FLAT WASHER	ϕ6	4
OA237A	O-RING	ARP568-237	1	SB0801	TOP BUMPER		1	YW0602	FLAT WASHER	ϕ6	2
OA328H	O-RING	46.99×5.33	1	SB0901	BOTTOM BUMPER		1				
OB032A	O-RING	2.5×1.4	2	SB1001	DRIVER GUIDE		1				
OB521A	O-RING	51.5×3.1	1	SB1101	NOSE		1				
OB651A	O-RING	65x3	1	SB1501	NAIL GUIDE		1				
OB691A	O-RING	68.5×2.95	1	SB1601	ROLLER		1				
OP006A	O-RING	P6	2	SB1701	PUSHER SPRING		1				
OP009A	O-RING	P9	1	SB1801	SPRING SEAT		1				
OP020A	O-RING	P20	1	SB1901	WASHER		1				
SA0901	HEAD VALVE SEAL		1	SB2101	COMPRESSION SPRING		1				

★☆ If you need to order parts, please mark both Parts No. and Description. ☆★

2019/6/18