P40B05 (MA/S1-05)

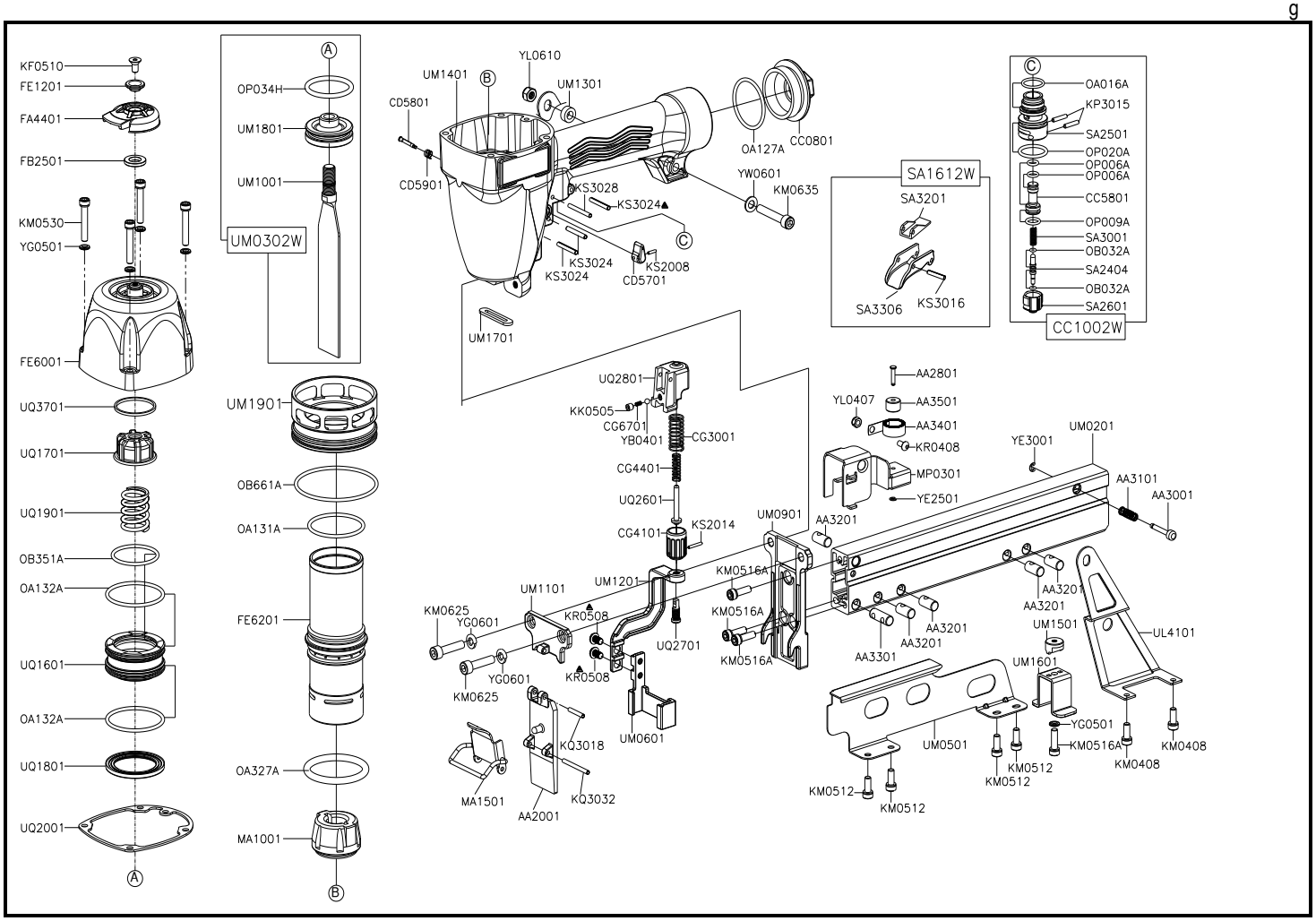

Part_No	Description	Spec	Q'ty	Part_No	Description	Spec	Q'ty	Part_No	Description	Spec	Q'ty
AA2001	ADJUSTABLE PLATE(B)		1	KR0408	BUTTON HD.BOLT	M4×0.7－8L	1	UM0901	GUIDE PLATE		1
AA2801	PIN		1	▲ KR0508	BUTTON HD.BOLT	M5×0.8－08L	2	UM1001	DRIVER		1
AA3001	STOP PIN		1	KS2008	SPRING PIN	§ 2-8L	1	UM1101	ADJUSTABLE PLATE(A)		1
AA3101	COMPRESSION SPRING		1	KS2014	SPRING PIN	§ 2-14L	1	UM1201	WORK CONTACTING ELEMENT(B)		1
AA3201	NUT ROLLER		5	KS3016	SPRING PIN	§ 3-16L	1	UM1301	FLAT WASHER		1
AA3301	NUT ROLLER		1	▲ KS3024	SPRING PIN	§ 3-24L	3	UM1401	BODY		1
AA3401	PUSHER SPRING		1	KS3028	SPRING PIN	§ 3-28L	1	UM1501	FIXED LUMP		1
AA3501	ROLLER		1	MA1001	BUMPER		1	UM1601	GAGE		1
CC0801	END CAP		1	MA1501	SUPPORT SET ASSY.		1	UM1701	NOZZLE		1
CC1002W	TRIGGER VALVE ASSY.		1	MP0301	PUSHER		1	UM1801	MAIN PISTON		1
CC5801	PILOT VALVE		1	OA016A	O-RING	ARP568-016	1	UM1901	COLLAR		1
CD5701	REVOLVE BOTTON		1	OA127A	O-RING	ARP568-127	1	UQ1601	HEAD VALVE PISTON		1
CD5801	ROLLER PIN		1	OA131A	O-RING	ARP568-131	1	UQ1701	PISTON STOP		1
CD5901	COMPRESSION SPRING		1	OA132A	O-RING	ARP568-132	2	UQ1801	HEAD VALVE SEAL		1
CG3001	COMPRESSION SPRING		1	OA327A	O-RING	ARP568-327	1	UQ1901	COMPRESSION SPRING		1
CG4101	ADJUSTING WHEEL		1	OB032A	O-RING	2.5×1.4	2	UQ2001	CAP SEAL		1
CG4401	COMPRESSION SPRING		1	OB351A	O-RING	35×2.5	1	UQ2601	UPPER SAFETY		1
CG6701	COMPRESSION SPRING		1	OB661A	O-RING	66.03x2.4	1	UQ2701	SAFETY ADJUST PIN		1
FA4401	EXHAUST CAP		1	OP006A	O-RING	P6	2	UQ2801	SAFETY SET		1
FB2501	PISTON STOP		1	OP009A	O-RING	P9	1	UQ3701	SPACER		1
FE1201	EXHAUST CAP RING		1	OP020A	O-RING	P20	1	YB0401	STEEL BALL	§ 4	1
FE6001	CYLINDER CAP		1	OP034H	O-RING	33.7×3.5	1	YE2501	E-RING	§ 2.5	1
FE6201	CYLINDER		1	SA1612W	TRIGGER ASSY.		1	YE3001	E-RING	§ 3.0	1
KF0510	FLAT HD.BOLT	M5×0.8－10L	1	SA2404	TRIGGER VALVE STEM		1	YG0501	SPRING WASHER	§ 5	5
KK0505	HEX.SOC.SET SCREW	M5×0.8－5L	1	SA2501	TRIGGER VALVE SEAT		1	YG0601	SPRING WASHER	§ 6	2
KM0408	HEX.SOC.HD.BOLT	M4×0.7－8L	2	SA2601	TRIGGER VALVE SEAT		1	YL0407	LOCK NUT	M4×0.7	1
KM0512	HEX.SOC.HD.BOLT	M5×0.8－12L	4	SA3001	COMPRESSION SPRING		1	YL0610	LOCK NUT	M6×1.0	1
KM0516A	HEX.SOC.HD.BOLT	M5×0.8－16L	4	SA3201	CONTACT LEVER		1	YW0601	FLAT WASHER	§ 6	1
KM0530	HEX.SOC.HD.BOLT	M5×0.8－30L	4	SA3306	TRIGGER		1				
KM0625	HEX.SOC.HD.BOLT	M6×1.0－25L	2	UL4101	SUPPORT		1				
KM0635	HEX.SOC.HD.BOLT	M6×1.0－35L	1	UM0201	MAGAZINE SEAT		1				
KP3015	PARALLEL PIN	§ 3×15L	2	UM0302W	DRIVER ASSY.		1				
KQ3018	SPRING PIN	§ 3×18L	1	UM0501	COVER MAGAZINE		1				
KQ3032	SPRING PIN	§ 3×32L	1	UM0601	WORK CONTACTING ELEMENT(A)		1				

★☆ If you need to order parts, please mark both Parts No. and Description. ☆★